In the beginning…
ROUND IS GOOD

©Marty Kaminsky, 2012
revised - 10/2016
martykaminsky@gmail.com
www.martykaminsky.com

When I started turning, any bowl that escaped the trash was a great bowl. I'd turn whatever wood I could find, wet, dry, firewood – you name it. I was totally satisfied with the oval bowls that usually resulted. Satisfied? I was way past satisfied; I was thrilled. For a while. Eventually my standards increased. I started wanting bowls that were round and didn't rock on the countertop. So I started roughing out bowls, leaving them thick-walled, and putting them on the shelf for five or six months before turning them to the final thickness and shape. I'd had some (great) ideas when I turned the rough bowls, but six months later I'd have lost my enthusiasm for whatever had been so compelling – if I even remembered what I had in mind back then. I needed to find a quicker way to dry my vessels.

I'm not saying there's anything wrong with bowls that go oval as they dry. Experienced turners, who are very familiar with the characteristics of the timbers they turn, create beautiful forms in turnings that warp and go oval as they dry. Call it controlled accidents. Their knowledge of their woods allows them to predict how they will deform upon drying, and they use that understanding to foresee the finished turning. But this article is about making round bowls.

I looked into a variety of ways of drying. Various approaches to air drying either take a long time or require a lot of effort. Microwaving seems like such a bother. There's freeze drying – don't know much about it. Boiling is supposed to reduce drying defects and drying time, but it's another big bother and still takes about three weeks to dry. Then there's "double cooking" – a combination of microwaving and oven cooking. This is supposed to get you from wet to dry wood in a day. Salt, soap, and alcohol are also materials used in aiding drying.

I haven't tried most of these methods – I wanted something quick and easy, and none of these qualified. Perhaps they're excellent methods with some advantages over my approach, but my method is very easy and very fast.

Drying box

I dry my rough turned bowls in about three to seven days in a heated drying box. You'd think that force drying at this fast rate would result in a lot of cracking. Well, sometimes I get cracks, but not nearly as often as I would have thought, and, in fact, not as often as I used to get when I air dried my bowls for six months. My theory is that with this method of circulating hot air, I am drying the wood more evenly than air drying.

My drying box is a simple device: An insulated box with a space heater (with a fan) at one end and a hole at the other. The space heater is adjusted to maintain a temperature of about 110 degrees F inside the box.

Drying box hanging from the ceiling with the lid open. Notice the winch in the upper right, and the 4" hole in the end of the box.

Looking inside the drying box.

After rough-turning my bowls to about one inch thick (the rule-of-thumb is the wall thickness should be 10% of the diameter) I weigh them and write the weight of each on the bowl. The bowls then go in the box, the heater is turned on, and I weigh the bowls (and record the weight) each day. This is not the place for a bathroom scale; use a decent digital scale that reads down to small increments of a pound (Harbor Freight's item 95364 works well). When the weight stops changing, they're dry.

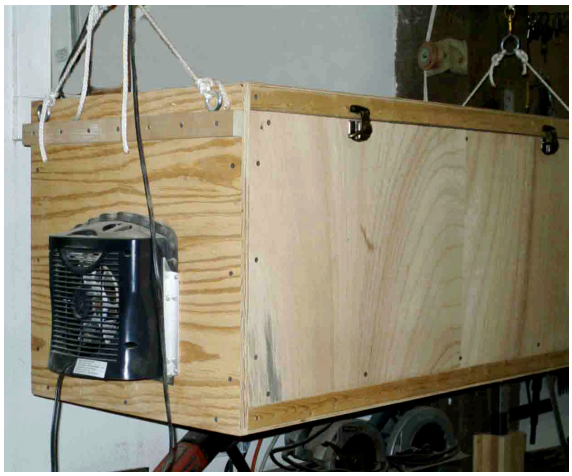

Heater end of drying box

After the bowl is dry, finish-turn it to the desired final shape and wall thickness.

I have my box rigged up on a pulley and boat winch system so that I can raise it to the ceiling to get it out of the way when it's not in use.

Building and Assembly

Drying box in the lowered position showing the pulley and winch hoist system

I'm not going to go into details here - you may want different dimensions. Basically, my box is made of ¼ inch plywood over a 2x2 inch framework with one end being ¾ inch plywood. It's 21" x 21" x 48" - much bigger than I need – it'll handle a lot of bowls, but I seldom have more than three going at any one time. If I were doing it again I'd probably make it half the size. Nothing about this is critical; it's just an insulated box with a space heater at one end and a hole at the other. Hinge the lid on the box with a couple of 3 inch hinges. Then insulate the inside surfaces with 3/4 inch residential insulation sheathing (available at lumber yards and home improvement stores). The box has a 4 inch hole low on one end, and a hole on the other end to accommodate an electric space heater (the space heater must have a fan). You might have to use some cleverness to figure out how to attach the space heater to the box. I pop riveted a couple of pieces of angle aluminum to the space heater to serve as a flange to mount it to the box. Don't spend a lot on the heater. Mine cost about $18 at Home Depot.

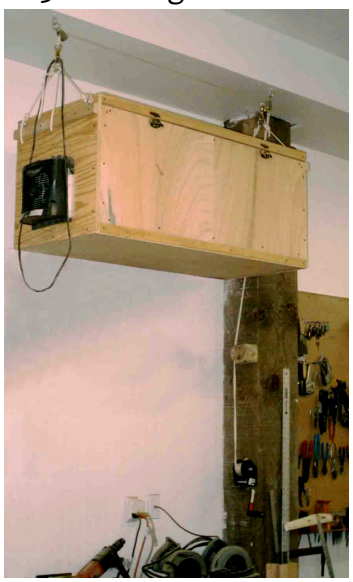

Drying box in the raised position.

Calibrating the heater

There are two ways to calibrate the heater to get a suitable temperature inside the box. The first uses the controls on the heater; alternatively, you can purchase an inexpensive thermostat to set the temperature.

<u>Calibrating the temperature with the space heater's controls</u>

Most heaters have a fan and a temperature control. Put the fan control on the setting that makes it run when the heating element is on (and goes off when the element is off, that is, when the interior has reached the desired temperature). Then, put a thermometer in the box and use the following process to adjust the interior temperature to about 110 degrees Fahrenheit. This is a "tweaking" process: Start with the temperature control at mid-point. Put the thermometer in the box and close the lid. Go away for an hour. Check the temperature. Tweak the temperature dial up or down as needed. Keep repeating this process until you have your box at about 110 degrees. I don't think there's anything

particularly magic about this temperature – probably anything between 100 and 120 degrees would be fine.

Setting the temperature using a thermostat

Well, my first space heater worked great. After the adjustment described previously, it kept a pretty constant temperature. After years of use that heater failed and I replaced it with another inexpensive heater. This one had the same fan and temperature controls, but it wouldn't maintain a temperature set point. The temperature varied from nothing to too-hot-to-handle. So I added a thermostat. Apart from giving good temperature control, the thermostat simplified calibration. It has a calibrated dial. Set the space heater on its highest setting with the fan running only when the heat is on, and set the thermostat on 110 degrees.

If you want to add the thermostat, here's what you need:

- SureSTAT T110 Single Stage Thermostat
  $34.95
  ACF Greenhouses
  www.LittleGreenhouse.com
  434-374-2706
- 12 feet, 16 gauge, two conductor wire (if your space heater has a three prong plug, use three conductor wire)
- Plug, two prong (use 3 prong if the space heater has a three prong plug)

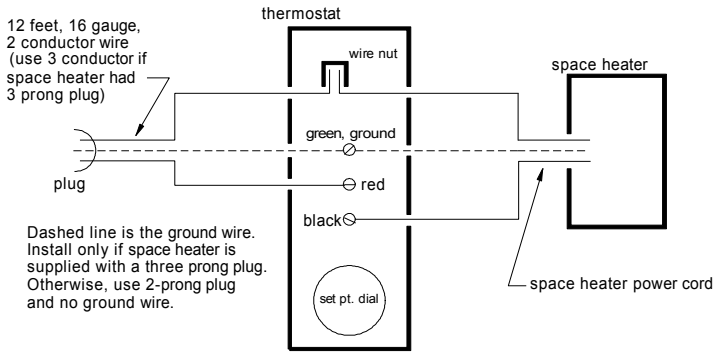

Installation:

Install the thermostat low in the box toward the end with the hole.

Wire as shown above (note: you'll need to cut off the original plug from the space heater).